LESSON 2

TOPIC 1

Site Investigation and Sampling Methods

SOILS AND FOUNDATIONS WORKSHOP

What Site Exploration Techniques are Used by the Highway Agency?

Slide 2-1-1

SITE INVESTIGATION AND SAMPLING METHODS

Lesson 2 - Topic 1

Slide 2-1-2

SITE INVESTIGATION AND SAMPLING METHODS

1. Differentiate Site Exploration and Sampling Methods

2. Describe the SPT Test

ACTIVITY: Question-Answer

Slide 2-1-3

The Six Stages of a Project

1. Enthusiasm
2. Disillusionment
3. Panic
4. Search for the Guilty
5. Punishment of the Innocent, and
6. Honor and Praise for the Non-Participants

Slide 2-1-4

Purpose of a Site Investigation

- ***Assess Suitability of Site for Proposed Project***
- ***Enable Adequate and Economic Design***
  - ***No Failures - No Conservatism***
- ***Foresee and Provide for Construction Problems that may Arise (Reduce Claims)***

Slide 2-1-5

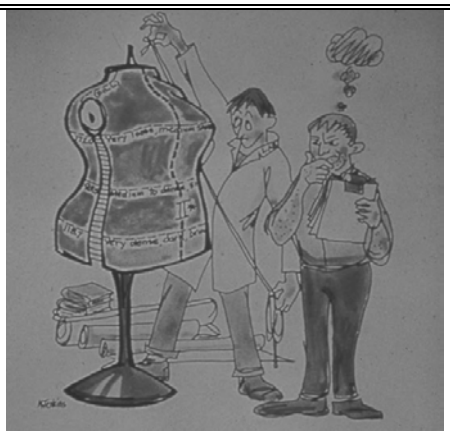

Foundation Engineer

Slide 2-1-6

Communicate and Coordinate

Selection, Design and Construction of a Safe, Cost-effective Foundation Requires Good Communication and Coordination Among Engineers, Geologists, Drillers, Structural Engineers, Roadway Engineers, and Construction Engineers

Slide 2-1-7

Site Investigation Phases

- ***Site Reconnaissance***
- ***Detailed Investigation***
- ***Construction Observation and Monitoring***

Slide 2-1-8

Site Reconnaissance

- ***Where Site Located***
- ***Geologic Maps-Topographic Maps-Well Logs***
- ***Air Photos***
- ***Nearby Boring Data***
- ***Site Inspection (With Bridge Designer)***

Slide 2-1-9

Site Reconnaissance (Cont'd)

- ***Equipment Needed to Access Site***
- ***Basic Design Decisions***
- ***Prepare Site Reconnaissance Report***

Slide 2-1-10

Slide 2-1-11

Slide 2-1-12

"If you do not know what you are looking for in site investigation, you are not likely to find much of value."

R. Glossop-8th Rankine Lecture

Slide 2-1-13

Detailed Investigation

- ***Boring → Sampling → Testing***
- ***Develop Soil Profile***
- ***Get Parameters for Final Design***
  - ***Embankments***
  - ***Foundations***
- ***Data for Construction***

Slide 2-1-14

Preliminary Bridge Layout

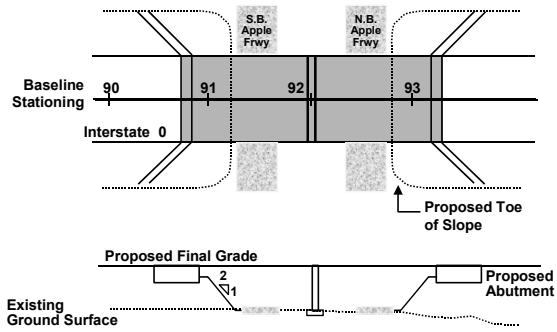

Slide 2-1-15

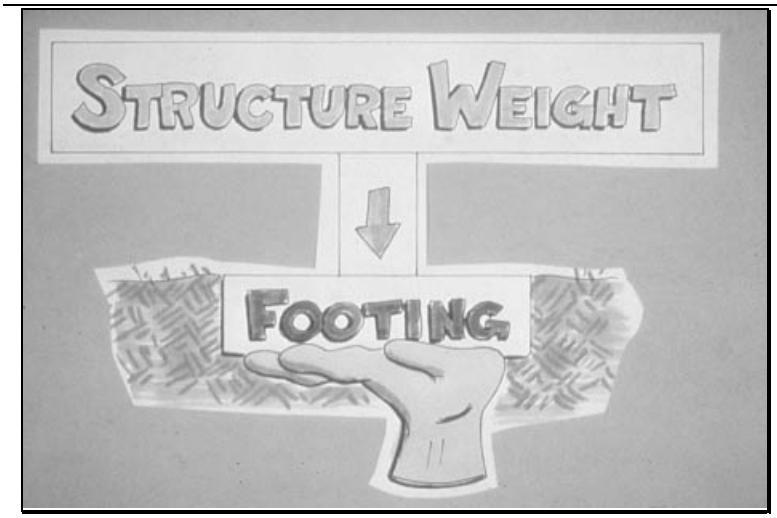

Slide 2-1-16

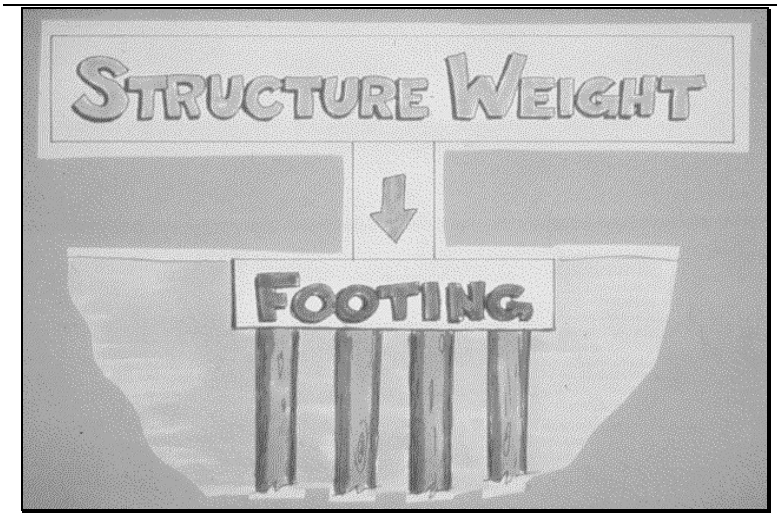

Slide 2-1-17

Detailed Investigation Relevant Information

- ***Soil Strata***
  - ***Depth, Thickness, Variability***
  - ***Visual Description and Lab Classification***
  - ***Relative Engineering Properties***
- ***Ground Water Elevations***

Slide 2-1-18

Detailed Investigation Relevant Information (Cont'd)

- ***Rock***
  - ***Depth to Rock***
  - ***Rock Type***
  - ***Rock Quality (RQD, Weathering, Jointing, Joint In-filling)***
  - ***Compressive Strength***

Slide 2-1-19

Exploration Methods and Equipment

Slide 2-1-20

Slide 2-1-21

Slide 2-1-22

Slide 2-1-23

Slide 2-1-24

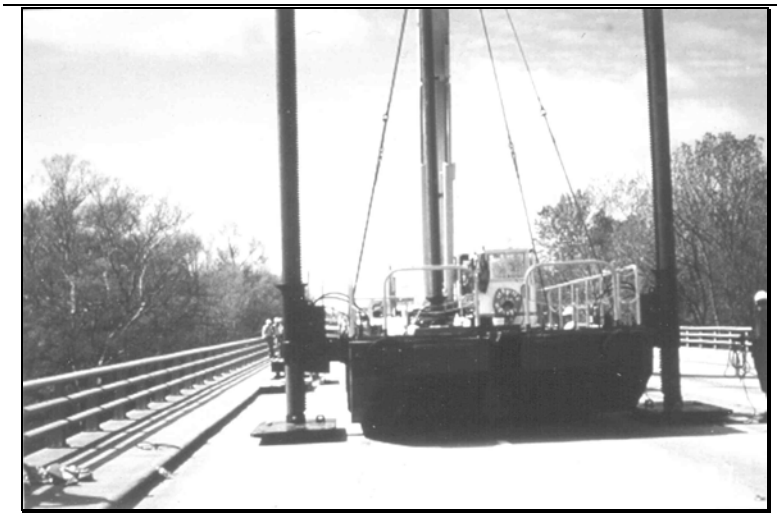

Slide 2-1-25

Slide 2-1-26

Drill Rig Schematic

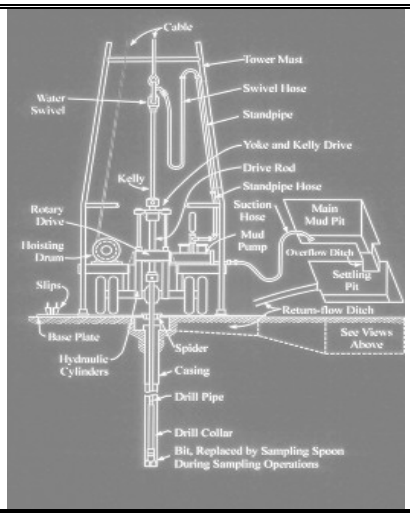

Slide 2-1-27

Slide 2-1-28

Slide 2-1-29

Hollow Stem Auger Plugged for Augering and Used for Sampling

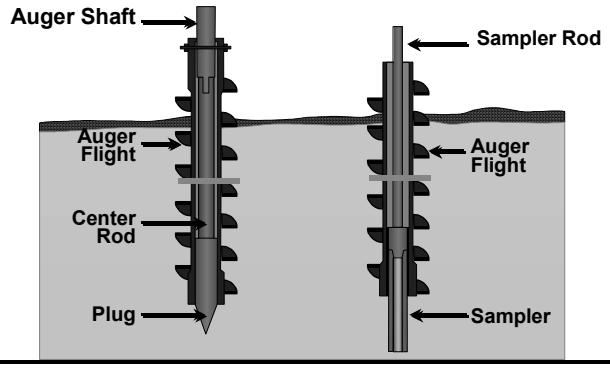

Slide 2-1-30

Soil Sampling and Testing Methods

Slide 2-1-31

Cohesive Soils

"Undisturbed" Tube Samples
(Shelby or Piston Sampler)

Slide 2-1-32

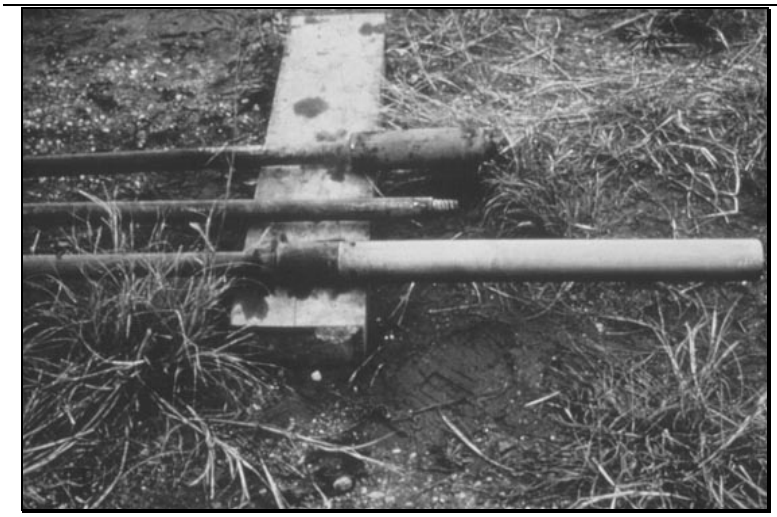

Slide 2-1-33

Slide 2-1-34

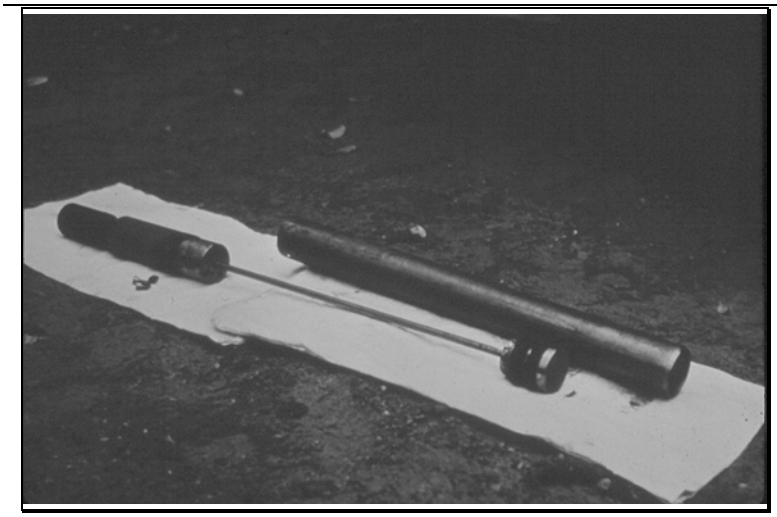

Slide 2-1-35

"Sampling of Granular Soils Use Split Barrel Sampler"

Slide 2-1-36

Split Barrel Sampler

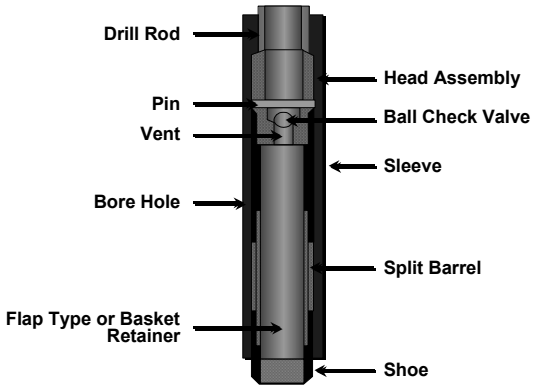

Slide 2-1-37

Slide 2-1-38

Slide 2-1-39

The Standard Penetration Test (AASHTO T-206, ASTM D-1586)

The Standard Penetration Test (SPT)

2" O.D. Sampler

140# Hammer/30" Drop

N = Blows/Foot

Slide 2-1-40

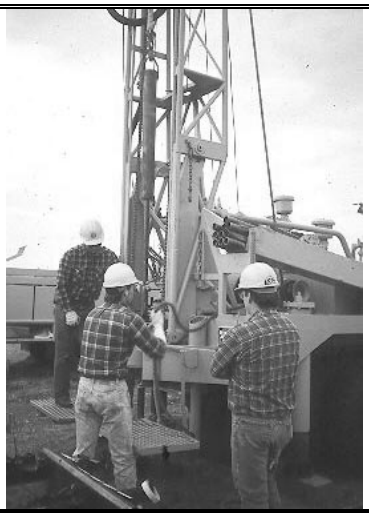

Slide 2-1-41

Use of SPT "N" Values

- ***Granular Soils***
  - ***Estimate Friction Angle ϕ***
  - ***Estimate Settlement***
- ***Cohesive Soils***
  - ***Only Crude Estimate of Cohesive Strength***
  - ***Do Not Use for Final Design***

Slide 2-1-42

Relative Density of Sand Based on SPT N -Values

Slide 2-1-43

Consistency of Cohesive Soils Based on SPT N-Values

N Blows/Foot	*Consistency*
Below 2	*Very Soft*
2 – 4	*Soft*
5 – 8	*Medium*
9 – 15	*Stiff*
16 – 30	*Very Stiff*
Over 30	*Hard*

Slide 2-1-44

SPT Test - Common Errors

- ***Damaged Drive Shoe***
- ***Variation in Hammer Fall***
- ***Effect of Overburden Pressure***
- ***Plugging End of Sampler***
- ***Hollow Stem Auger Quick Condition***
- ***Careless Work by Drill Crew***

Slide 2-1-45

Advantage of SPT Test

- ***Very Economical Test***
- ***Provides Sample for Soil Classification***
- ***Long Service Life of Equipment***
- ***Vast SPT Data Base***
- ***Numerous Empirical Correlations with SPT***

Slide 2-1-46

Gravels - What to do?

- ***SPT may not be Dependable***
- ***Can Use Oversize Sample Spoon***
- ***Can Use Dynamic Cone for Correlation to SPT Test***

Slide 2-1-47

Rock Sampling

Slide 2-1-48

Single Tube Core Barrel

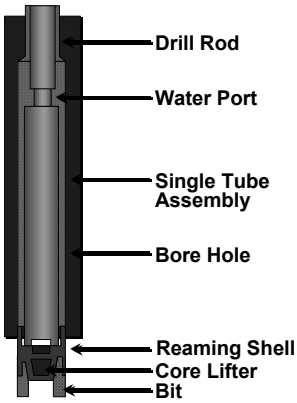

Slide 2-1-49

Slide 2-1-50

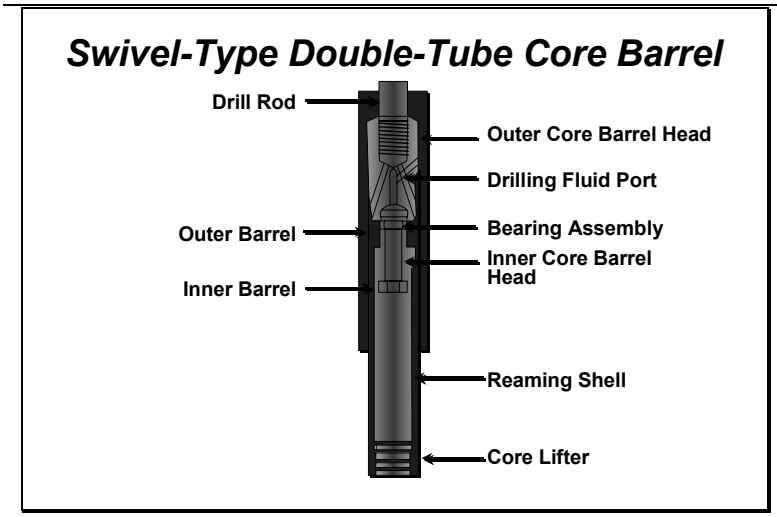

Slide 2-1-51

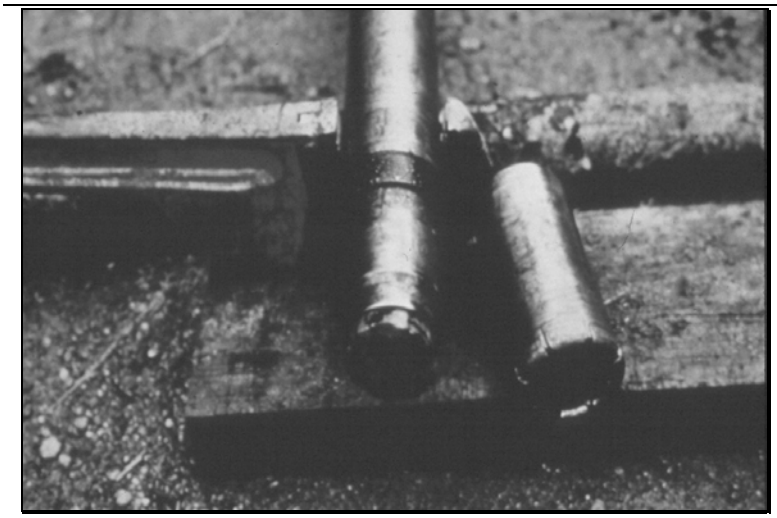

Slide 2-1-52

Wire-Line Sampler

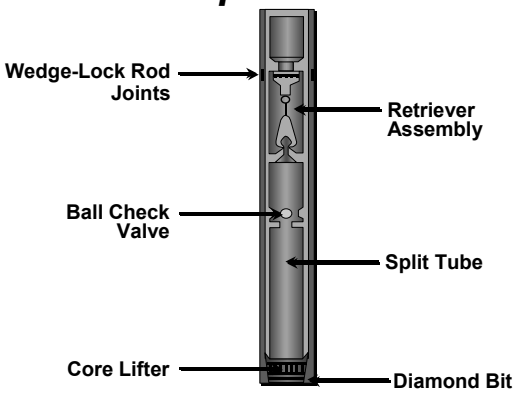

Slide 2-1-53

Slide 2-1-54

In-Situ Testing

- ***Vane Shear Test***
  - ***Clays, Silts, Peats***
- ***Static Cone Penetrometer***
  - ***Clays, Silts, Sands***
- ***Pressuremeter***
  - ***Clay, Weak Rock, Sand***

Slide 2-1-55

Vane Shear Device

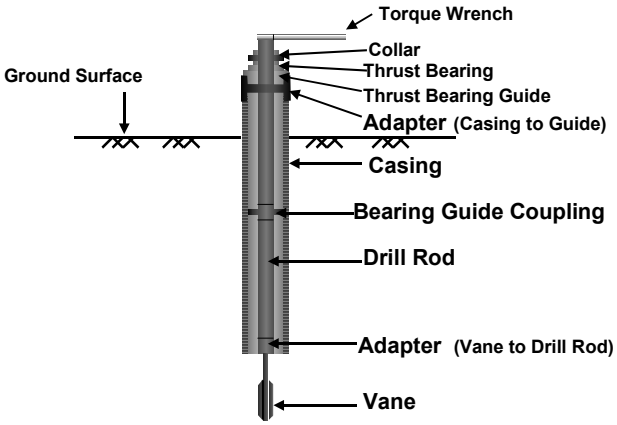

Slide 2-1-56

Slide 2-1-57

Slide 2-1-58

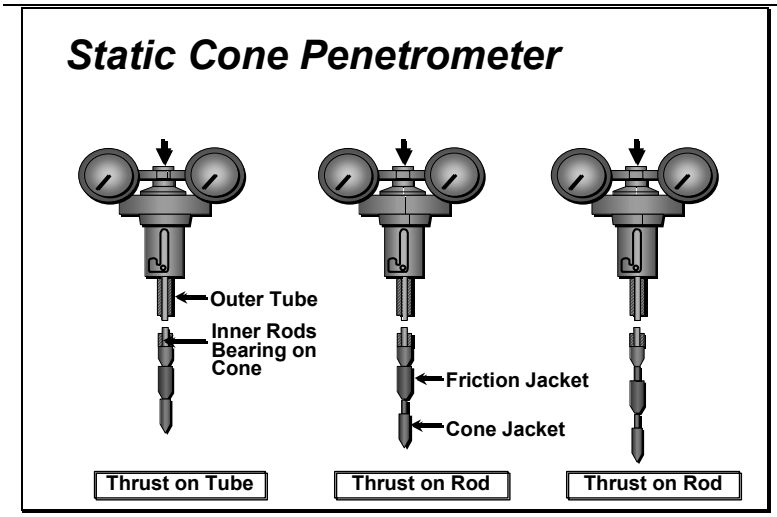

Slide 2-1-59

Slide 2-1-60

Minimum Exploration Program for Structure Sites

- ***How Much Exploration?***
- ***How Many Borings?***
- ***How Deep Should Borings Penetrate?***
- ***How Often to Sample?***
- ***When to Measure Water Levels?***
- ***Driller's Responsibilities?***

Slide 2-1-61

Subsurface Exploration by Drilling Contractors

- ***Clearly Define Boring Procedures, Location and Depth Criteria***
- ***Assign a Driller from the Highway Agency to Inspect Field Drilling and Sampling Operations***

Slide 2-1-62

SOILS AND FOUNDATIONS WORKSHOP

How Much Exploration?

Points to remember

- *Boring Cost <<< Bridge Cost*
- *2.5″ Diameter Boring ≅ $ 12″ Diameter Pile*

Rule of Thumb

- *Cost of Adequate Site Investigation is 1% to 2% of Construction Costs*

Slide 2-1-63

SOILS AND FOUNDATIONS WORKSHOP

How Much Exploration? (Cont'd)

This is the Place to Put Your Money, Time and Effort!!!

- *Reduce Failures*
- *Prevent Overconservative Design*
- *Reduce Claims*

More than 50% of Highway Construction Claims are Related to Geotechnical Items.

Slide 2-1-64

SOILS AND FOUNDATIONS WORKSHOP

Highway Embankment and Cuts

- ***Borings Typically Spaced 200' to 400'***
- ***At Least One Boring Per Landform***
- ***Boring Depth = Twice Embankment Height***
- ***Cut Boring Depth at Least 15' Below Depth of Cut***

Slide 2-1-65

SOILS AND FOUNDATIONS WORKSHOP

Approach Embankments

- ***Soft Ground Conditions Require More Detailed Exploration as Stability and Settlement Values Must be Established prior to Structural Foundation Design.***
- ***Borings Must Extend into Competent Soil or Rock (Depth Determined by Structural Design Criteria)***
- ***Shallow Auger Explorations Commonly Made to Determine Depth of Unsuitable Surface Soils and Topsoil.***

Slide 2-1-66

SOILS AND FOUNDATIONS WORKSHOP

"MINIMUM" Program For Structure Site

NUMBER OF BORINGS

- ***ONE boring at EACH pier and abutment under 100' long***

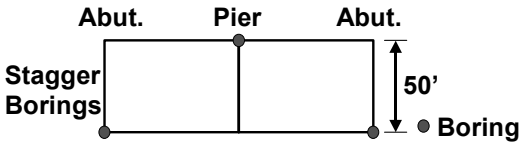

- ***TWO borings at EACH pier and abutment over 100' long, one at each end***

Abutment borings also used for Approach Embankment Design

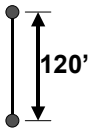

Slide 2-1-67

SOILS AND FOUNDATIONS WORKSHOP

"MINIMUM" Program For Structure Site (Cont'd)

DEPTH OF BORINGS

- ***Est. From Site Recon or Existing Data or "Rule of Thumb".***
- ***Extend Boring Depth into Competent Soil using Criteria such as:***

SPT - N ≥ 20 for 20 Consecutive ft. of Drilling & Sampling

OR

Core Min. 10 ft. into Rock with Avg. Recovery ≥ 50%

Slide 2-1-68

SOILS AND FOUNDATIONS WORKSHOP

"MINIMUM" Program For Structure Site (Cont'd)

SAMPLING FREQUENCY

- ***Continuous SPT top 15' of borings where spread footings may be placed on natural soil.***
- ***SPT at 5' interval elsewhere.***

Slide 2-1-69

SOILS AND FOUNDATIONS WORKSHOP

"MINIMUM" Program For Structure Site (Cont'd)

- ***"Undisturbed" Shelby tube sample every 5' in at least one boring in cohesive soil (increase to 10' intervals after 30')***
- ***Soft clay - In - situ vane shear tests at 5' to 10' intervals***
- ***Make SPT borings first, then pick location of boring(s) for undisturbed samples based on preliminary evaluation of SPT borings.***

Slide 2-1-70

SOILS AND FOUNDATIONS WORKSHOP

"MINIMUM" Program For Structure Site (Cont'd)

WATER LEVEL

- ***Encountered during drilling***
- ***Completion of boring***
- ***24 hour min. after hole completed***
- ***Leave plastic perforated pipe in hole if want long term readings (allow minimum 1 week for W.L. to stabilize in clay)***

Slide 2-1-71

SOILS AND FOUNDATIONS WORKSHOP

"MINIMUM" Program For Structure Site (Cont'd)

DRILLERS DUTIES

- ***"Rough" visual description of samples***
- ***Prepare field drill log***
- ***SPT samples in jars or bags***
- ***Shelby tube samples (protect) to lab***

BORING NUMBERS

- ***Use unique numbering system Example : DH-BAF-1***

Slide 2-1-72

SOILS AND FOUNDATIONS WORKSHOP

"Extent" of Work Established as Work Progresses in Field

Driller Notify Foundation Engr. When Last Boring Begun

Need Good Communication & Coordination!!!

Slide 2-1-73

SOILS AND FOUNDATIONS WORKSHOP

SITE INVESTIGATION AND SAMPLING METHODS

1. ***Differentiate Site Exploration and Sampling Methods***
2. ***Describe the SPT Test***

ACTIVITY:

Question-Answer

Slide 2-1-74

SOILS AND FOUNDATIONS WORKSHOP

What Site Exploration Techniques are Used by the Highway Agency?

Slide 2-1-75